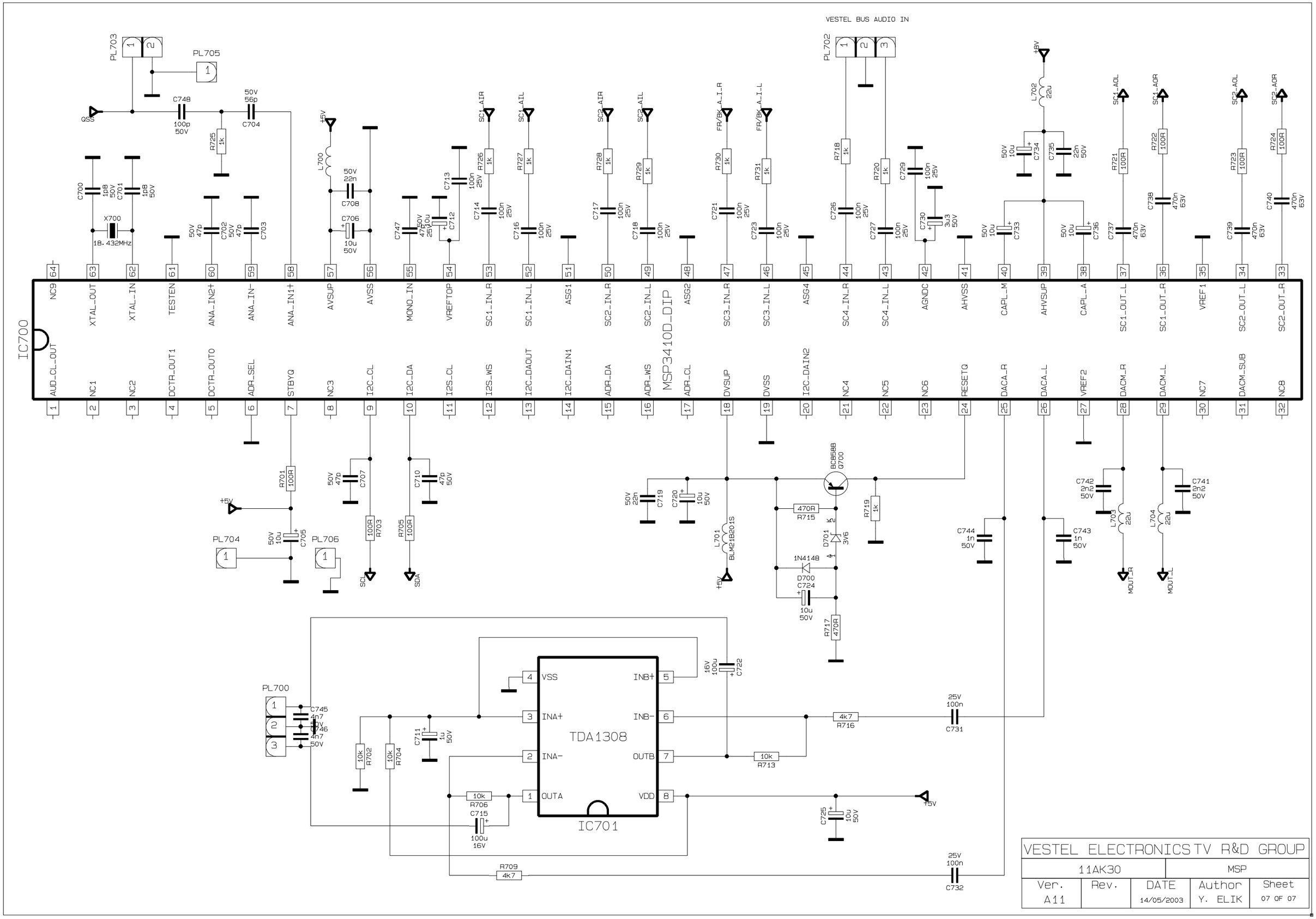
VESTEL BUS AUDIO IN
IC700
MSP3410D_DIP
IC701
TDA1308
PL703
PL705
PL702
PL704
PL706
PL700
QSS
X700
18.432MHz
BC858B
Q700
D701
3V6
1N4148
D700
L701
BLM21B201S
L702
22u
L703
22u
L704
22u
MOUT_R
MOUT_L
SCL
SDA
+5V
+8V
VESTEL ELECTRONICS TV R&D GROUP
11AK30
MSP
Ver.
A11
Rev.
DATE
14/05/2003
Author
Y. ELIK
Sheet
07 OF 07